NEW RECTANGLE BOWL WITH CHAMFER EDGE
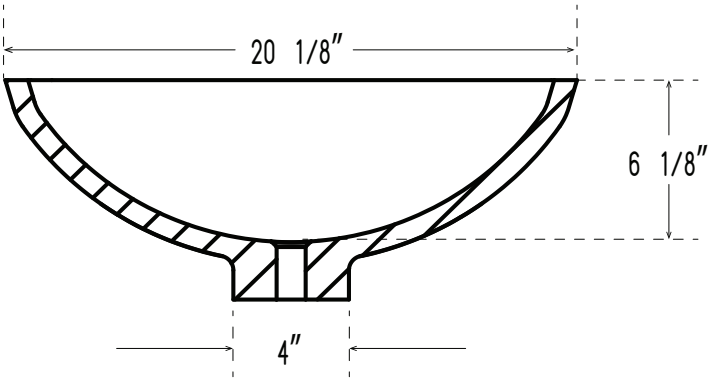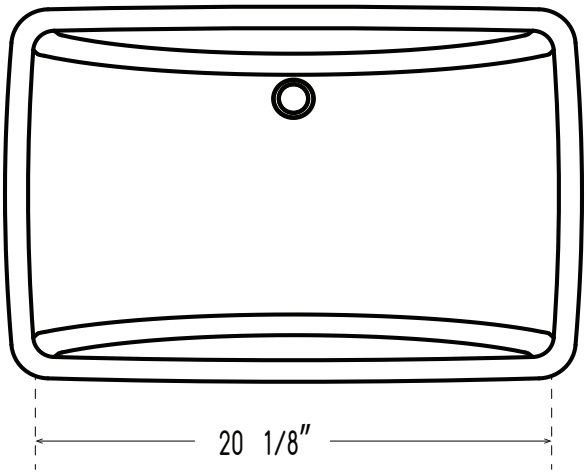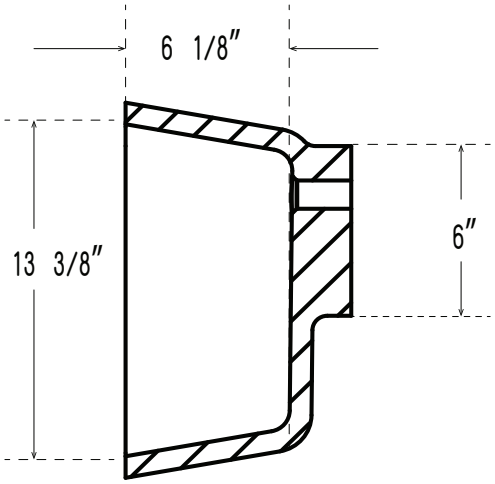
BM-SK20